DRAWING No. M0736A00A101-1

Carton

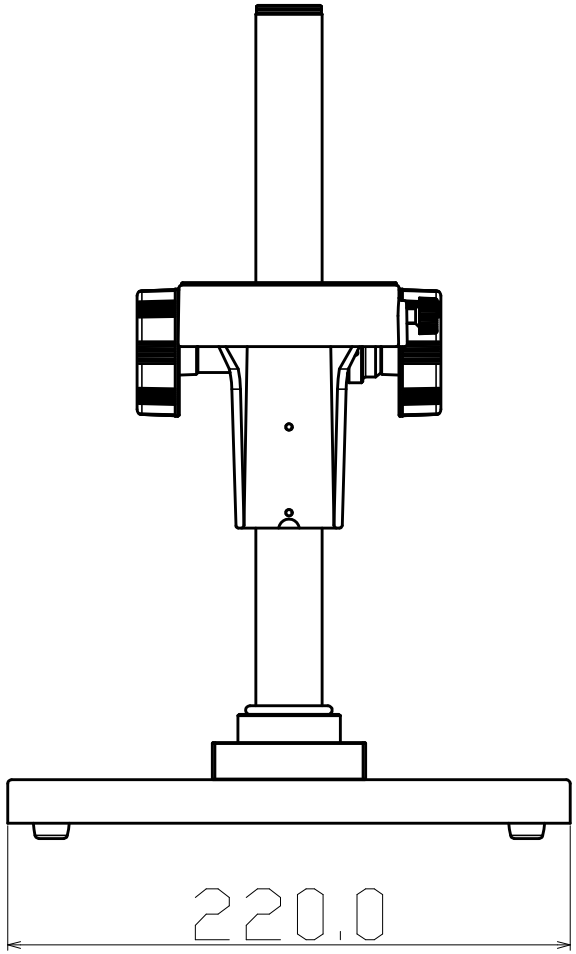

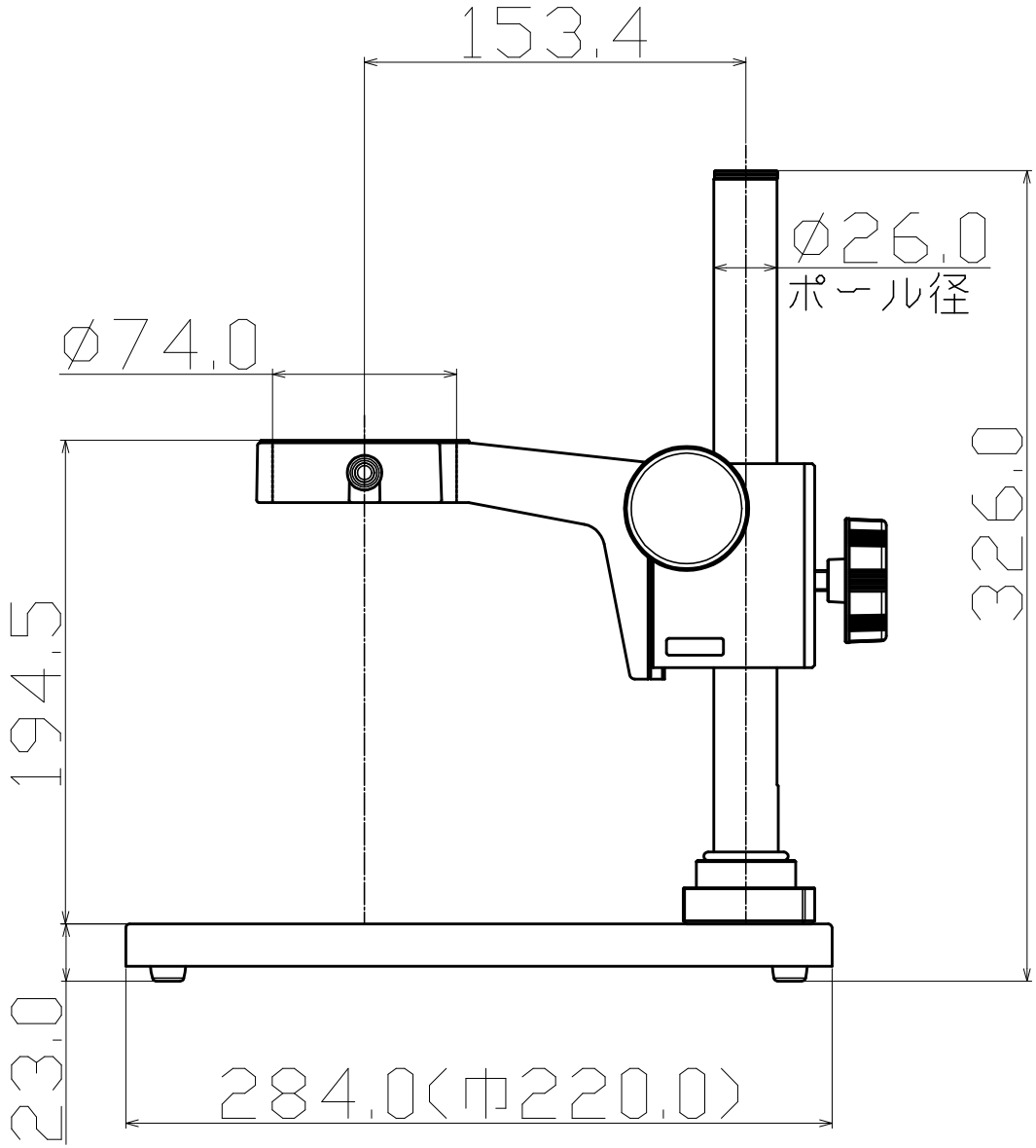

No.	DATE	ALTERATION	SIGN				
5				MATERIAL			
4				MATERIAL SIZE		DATE	15.12.16
3				HEAT TRE'T		PIECE	/UNIT
2				FINISH MARK		SCALE	1/1
1				SURFACE TRE'T		DESIGN	
						DRW	H.T

PART

P-260

OUTLINE DRAWING

PART No.

M0736A00A101